Dual Pneumatic

Atomizing Humidification System

TECHNICAL ENGINEERING SPECIFICATION

The Dual Pneumatic System successfully humidifies low temperature spaces where high levels of relative humidity are required. Typically 34° - 55°F and 70 - 95% RH.

Introduction:

The Dual Pneumatic atomizing humidification system utilizes air and water under pressure to atomize the water into tiny droplets. These droplets are sprayed directly into the free air where they rapidly evaporate to a gaseous state and raise the level of relative humidity in the space.

Operation is fully automatic and controlled by a humidistat. When the relative humidity level drops below the setting on the humidistat, the air solenoid opens. As soon as the air pressure builds up sufficiently to atomize, an air pressure switch closes the circuit to the water solenoid valve; starting the flow of water to the atomizing heads.

The Dual Pneumatic atomizing heads are designed and manufactured for dependable, extended operation. The all-brass or stainless steel construction eliminates rust and corrosion. One cleaning each year is typically sufficient to maintain performance. Atomizing heads are available in capacities of 6, 8, 10, 12, or 15 lbs/hr of water. The proper capacity is selected based on the installed height of the heads above the floor, clear area available for evaporation, and the conditions to be maintained in the space.

Applications:

- Baking Applications
- Cold Storage Rooms
- Food Processing & Storage
- Leather Storage
- Textile Plants
- Woodworking Plants
- Printing Operations
- Banana Rooms

Features & Benefits:

- Three Types of Head Assembly Configurations
- Low Energy Consumption
- Cleanout Pin Equipped Nozzles
- Fully Automatic Operation
- Non-dripping Atomizing Heads
- Low Air Consumption
- Four Decades of Proven Performance
- Systems Available for Raw or DI/RO Water
- Ideal for Dirty Atmospheres

Warranty:

- 2-Year Limited Warranty

Dual Pneumatic
Atomizing Humidification System

TECHNICAL ENGINEERING SPECIFICATION

General Specifications:

Model	Dual Pneumatic
Control Sections	Dual Regulated Compressed Air & Water
Voltage / Phase	120 VAC / 1-Phase
Control System	ON/OFF Control via Humidistat (Mechanical or Electronic)
Air Pressure Requirements	60 PSI to Control Section, 30 PSI at Atomizing Heads Control Humidity / High Limit Humidity / Air Proving Switch
Water Pressure Requirements	50 PSI to Control Section, 32-36 PSI at Atomizing Heads
Piping	Potable Water: Copper or Brass, DI/RO Water: 304/316 Stainless Steel
Atomizing Head Capacity	6, 8, 10, 12, or 15 lbs/hr each (3 Mounting Configurations Available)
Air Volume Requirements	12 SCFM per 100 lbs/hr of Water
Water Droplet Size	<10 Micron at 100% Output (Average)
Spray Head Shipping Weight	A-33 Assembly: 3 lbs each, A-17 & B-13 Assemblies: 6 lbs each
Control Section Shipping Weight	25 lbs each

Control Sections & Head Assemblies:

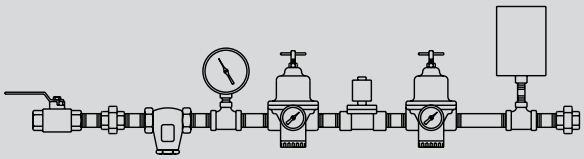

Typical Water Control Section

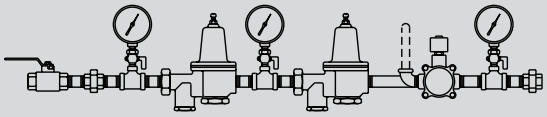

Typical Air Control Section

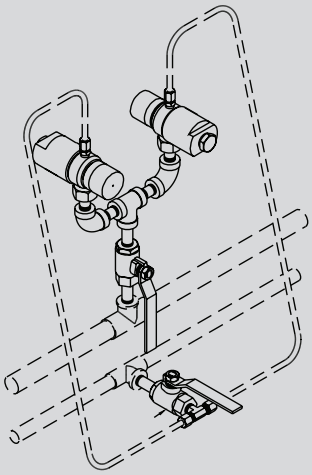

B-13 Head Assembly

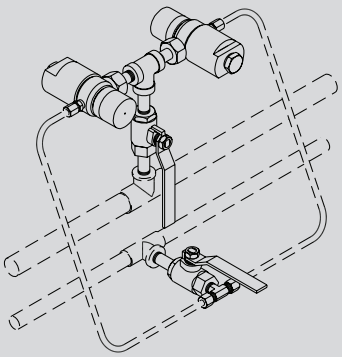

A-17 Head Assembly

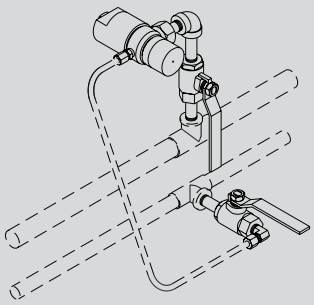

A-33 Head Assembly

©2010 Herrmidifier® - Engineered Humidification Solutions. Herrmidifier® is a registered trademark of Air System Components, Inc.
Herrmidifier® reserves the right to revise or modify products and/or specifications without notice.
All product specifications reflect available information at the printing of this brochure.

Herrmidifier® | 101 McNeill Road | Sanford, NC 27330 | Phone: 800-884-0002 | Fax: 800-458-2379
www.herrmidifier-hvac.com | Email: cs@herrmidifier-hvac.com